

V2106.01

Let's grow together

JX1

Medium Level Order Picker 0.5t

High volume order picking in a warehouse environment;
Max Platform height: 4.80m – Picking height 6.3m;
Truck Size 1590x1500x800, turning radius (1385),
suitable for narrow aisles in the warehouse;
Strong and steady;
AGM Battery (maintenance free), Large Lead–Acid battery
as option. Simple Battery exchange.

EP EQUIPMENT CO.,LTD
www.ep-ep.com

CE

Medium Level Order Picker 0.5t

JX1

Distinguishing mark						
1.1	Manufacturer			EP	EP	EP
1.2	Model designation			JX1(3200)	JX1(4100)	JX1(4880)
1.3	Drive unit			Electrics	Electrics	Electrics
1.4	Operator type			standing	standing	standing
1.5	rated capacity on front platform	Q 1	Kg	227	Δ227	Δ227
	rated capacity on behind platform	Q 2	Kg	137	137	137
	rated capacity on standing platform	Q 3	Kg	136	136	136
1.9	Wheelbase	y	mm	1150	1150	1256
Weight						
2.1	Service weight （include battery）		kg	1160	1340	1530
2.2	Axle loading, laden driving side/loading side		kg	680/980	740/1100	780/1220
2.3	Axle loading, unladen driving side/loading side		kg	490/670	520/820	540/990
Types,Chassis						
3.1	Tyre type, Driving wheels/Loading wheels			polyurethane/rubber	polyurethane/rubber	polyurethane/rubber
3.2	Tyre size, driving wheels（Diameter×Width）		mm	Φ230*75	Φ230*75	Φ230*75
3.3	Tyre size, loading wheels（Diameter×Width）		mm	Φ204*76	Φ204*76	Φ204*76
3.4	Tyre size, caster wheels（diameter×width）		mm	Φ74*48	Φ74*48	Φ74*48
3.5	Wheels, number driving，caster/loading (x=drive wheels)		mm	1x,2/2	1x,2/2	1x,2/2
3.6	tread，front	b10	mm	566	566	626
3.7	tread，rear	b11	mm	724	724	784
Dimensions						
4.2	Height, mast lowered	h1	mm	1510	2080	2090
4.4	Lift height	h3	mm	2950	3850	4630
4.5	Height, mast extended)	h4	mm	4540	5970	6750
4.7	Height of overhead guard (cabin)	h6	mm	1590	2120	2120
4.8	Seat height/standing height)	h7	mm	250	250	250
4.14	Stand height, elevated	h12	mm	3200	4100	4880
4.19	Overall length	l1	mm	1500	1500	1610
4.21	Overall width	b1/b2	mm	800	800	860
4.32	Ground clearance, center of wheelbase	m2	mm	50	50	50
4.33	front cargo platform width		mm	800×520	800×520	800×520
4.34	initial height of front cargo platform		mm	1082	1082	1082
4.35	Control handle height		mm	1010	1010	1010
4.36	behind platform width		mm	346×660	346×660	346×660
4.37	Overall length platform launch	l3	mm	1795	1795	1905
4.38	The channel width	Ast	mm	2005	2005	2070
4.39	Turning radius	Wa	mm	1385	1385	1450
Performance data						
5.1	Travel speed, laden/unladen（h12：0-520）		km/h	5.5	5.5	5.5
	Travel speed, laden/unladen（h12：520-1940）		km/h	3.7	3.7	3.7
	Travel speed, laden/unladen（h12：1940-2600）		km/h	2.5	2.5	2.5
	Travel speed, laden/unladen（h12：2600-MAX）		km/h	1	1	1
5.1.1	Travel speed, laden/unladen,backwards（h12：0-520）		km/h	5.5	5.5	5.5
	Travel speed, laden/unladen,backwards（h12：520-1940）		km/h	3.7	3.7	3.7
	Travel speed, laden/unladen,backwards（h12：1940-2600）		km/h	2.5	2.5	2.5
	Travel speed, laden/unladen,backwards（h12：2600-MAX）		km/h	1	1	1
5.2	Lifting speed, laden/ unladen		m/s	0.17/0.21	0.17/0.21	0.17/0.21
5.3	Lowering speed, laden/ unladen)		m/s	0.35/0.26	0.35/0.26	0.35/0.26
5.8	Max. gradeability, laden/unladen		%	0	0	0
5.10	Service brake			Electromagnetic	Electromagnetic	Electromagnetic
Electric-engine						
6.1	Drive motor rating S2 60 min		kW	1.7	1.7	1.7
6.2	Lift motor rating at S3 15%		kW	2.2	2.2	2.2
6.3	The maximum allowed size battery		mm	200x740x670	200x740x670	280x800x670
6.4	Battery voltage/nominal capacity K20		V/Ah	24/224	24/224	24/280
6.5	Battery weight		kg	163	163	250
Addition data						
8.1	Type of drive unit			AC	AC	AC
10.5	Steering design			Electronic	Electronic	Electronic
10.7	Sound pressure level at the driver's ear		dB (A)	74	74	74
Note：Δ Q1 Capacity，for JX1(4100)、JX1(4880)with a lifting height of over 3600mm，the maximum loading capacity derates to 72kg。						

If there are improvements of technical parameters or configurations, no further notice will be given.
The diagram shown may contain non-standard configurations.

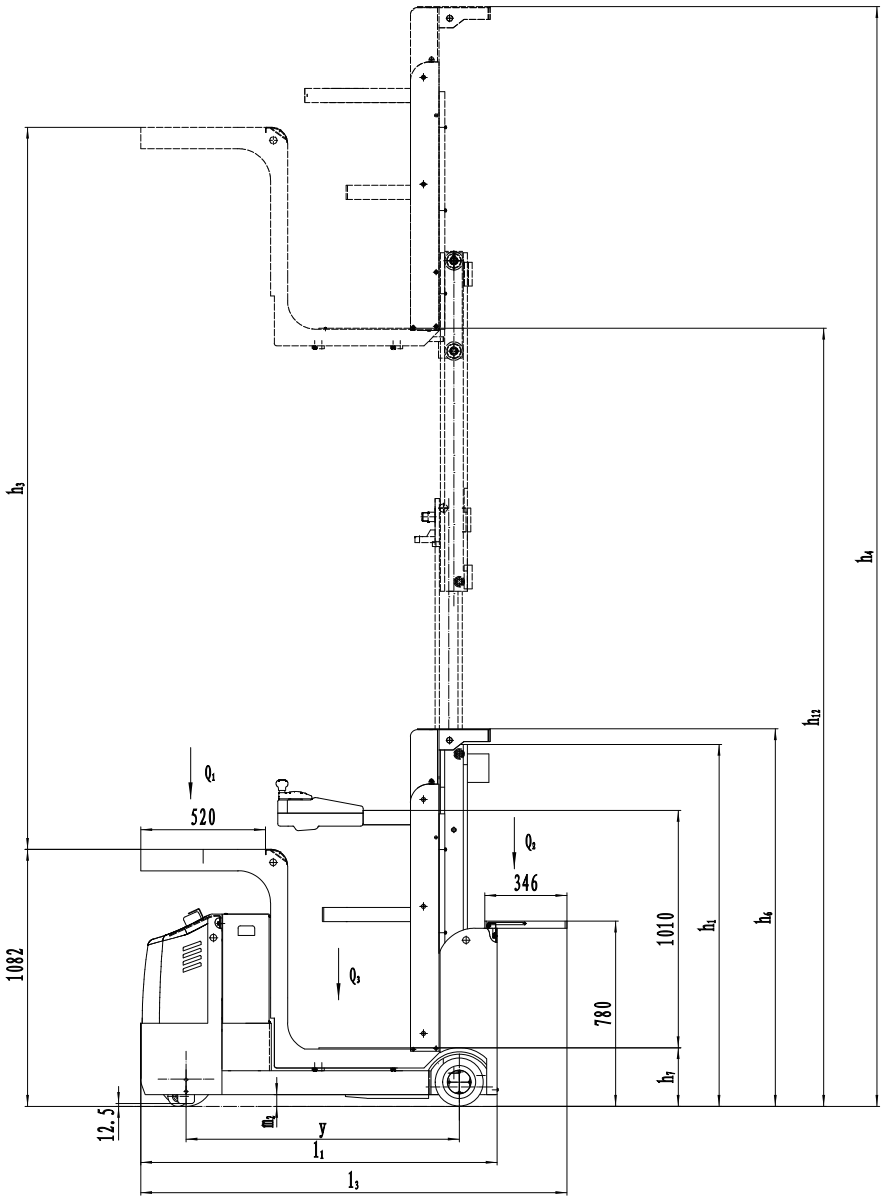

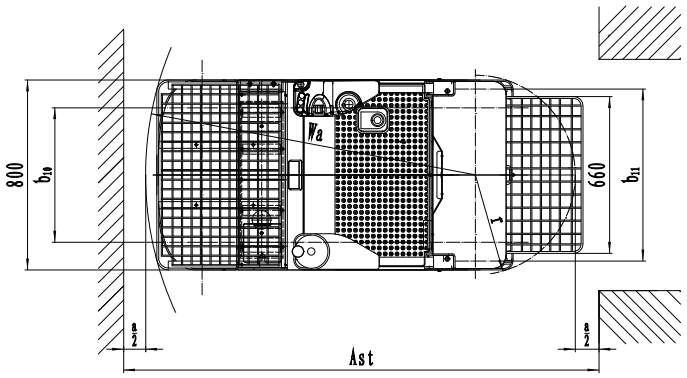

Ast=Wa+r+a

a=200